universal interoperability for grid-forming inverters

U.S. DEPARTMENT OF ENERGY

a U.S. Department of Energy consortium

Virtual Synchronous Machine Grid-Forming Inverter Model (REGFM_B1)

Wei Du, PNNL

Deepak Ramasubramanian, EPRI

Wednesday, September 27, 2023

VSM GFM Model

- A virtual synchronous machine (VSM) grid-forming inverter (GFM) model specification has been developed through the collaboration between PNNL, EPRI, and GE
- The steady state current limiting and fault ride-through control blocks came from a GE patent [1]
- SGRE also provided inputs to the model specification
- User-defined PSS/E and PSCAD models were developed at PNNL based on the model specification, and simulation results were compared

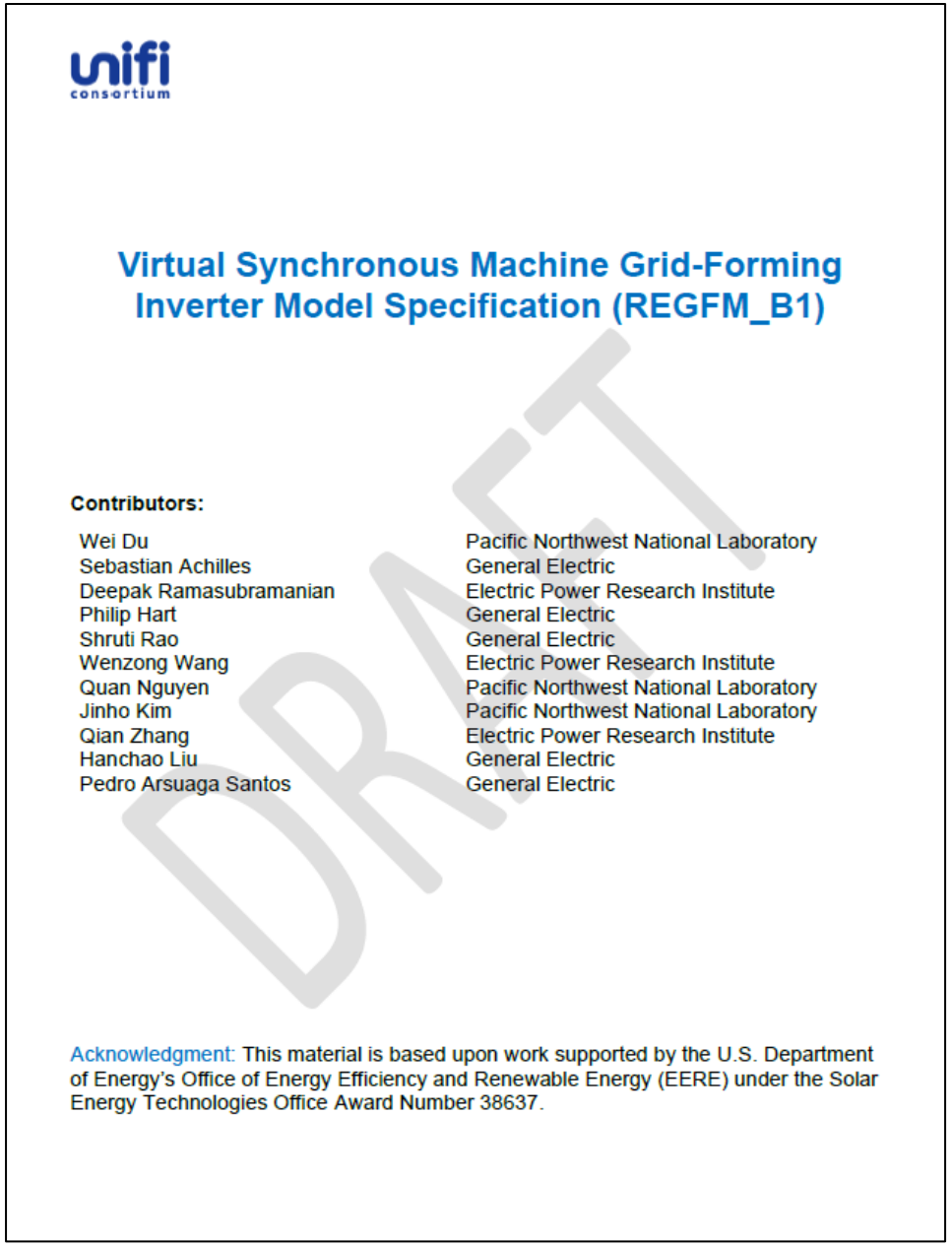

unifi consortium

Virtual Synchronous Machine Grid-Forming Inverter Model Specification (REGFM_B1)

Contributors:

Wei Du	Pacific Northwest National Laboratory
Sebastian Achilles	General Electric
Deepak Ramasubramanian	Electric Power Research Institute
Philip Hart	General Electric
Shruti Rao	General Electric
Wenzong Wang	Electric Power Research Institute
Quan Nguyen	Pacific Northwest National Laboratory
Jinho Kim	Pacific Northwest National Laboratory
Qian Zhang	Electric Power Research Institute
Hanchao Liu	General Electric
Pedro Arsuaga Santos	General Electric

DRAFT

Acknowledgment: This material is based upon work supported by the U.S. Department of Energy's Office of Energy Efficiency and Renewable Energy (EERE) under the Solar Energy Technologies Office Award Number 38637.

[1] Larsen EV, Delmerico RW, inventors; General Electric Co, assignee. Battery energy storage power conditioning system. United States patent US 5,798,633. 1998 Aug 25.

VSM GFM Model

- The VSM GFM model specification includes the VSM/inertial control block and the voltage control block
- A PLL is used to obtain the angle of the terminal voltage, and the VSM/inertial block controls the angle difference δ_{IT} (ωFlagb=0)
- The use of PLL in the VSM GFM is different from its use in GFLs
- The PLL can be considered as not existed during normal operation

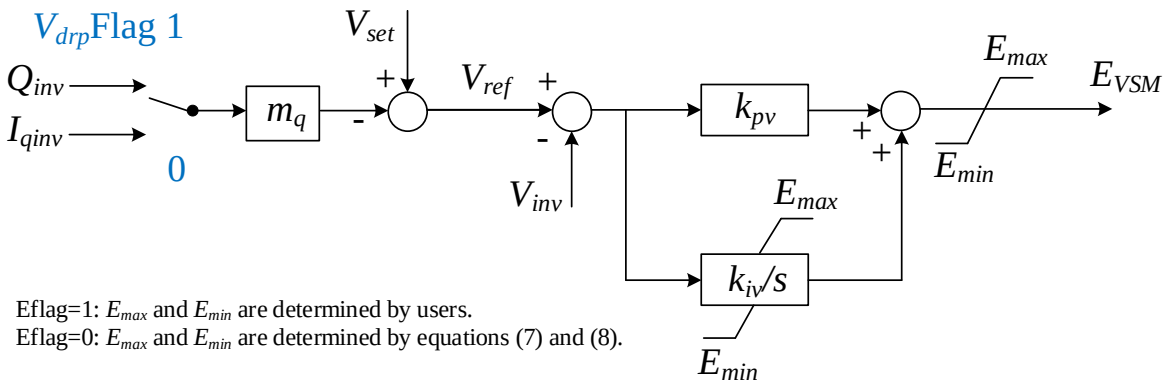

Voltage control block

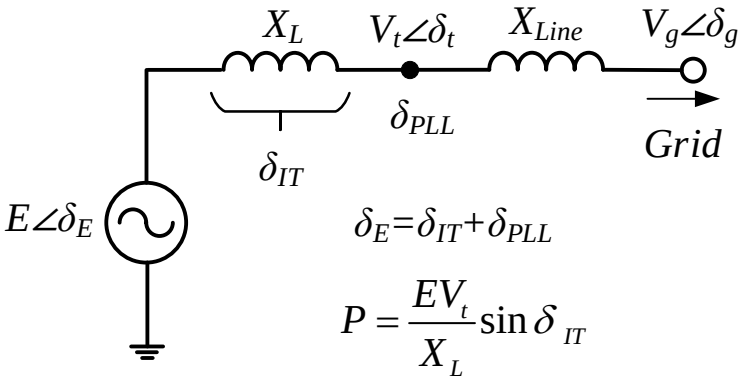

Voltage source behind impedance

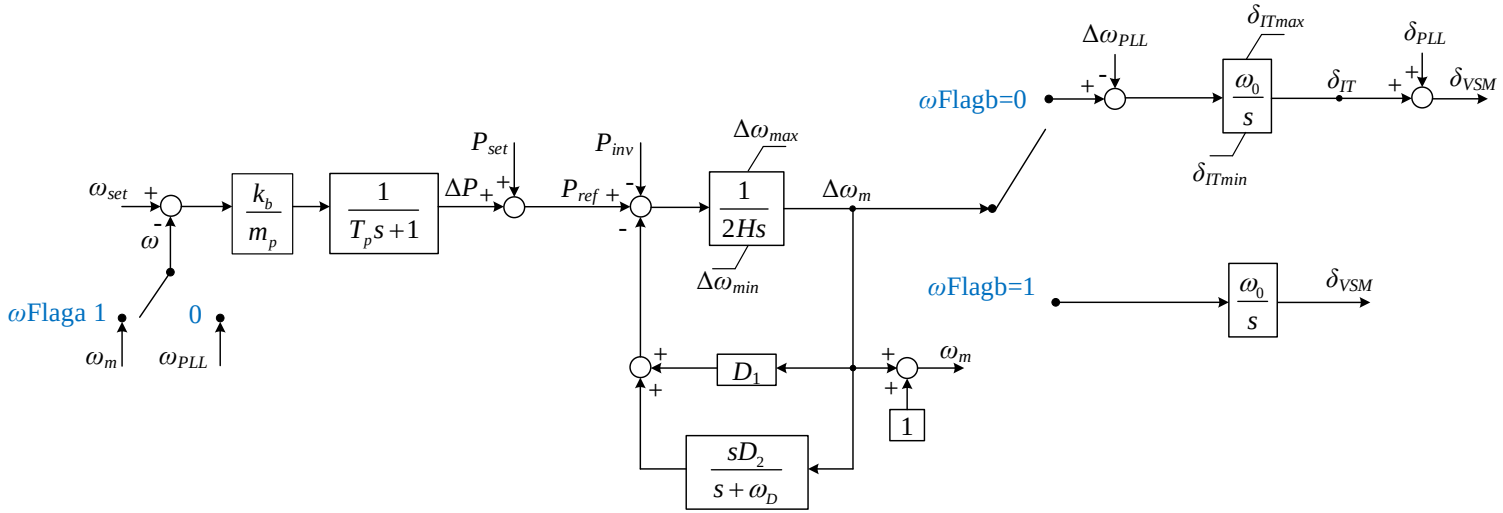

VSM/inertial control block

Steady State Current Limiting of VSM GFM

- The VSM GFM model specification includes the steady state ***active and reactive current limiting*** controls
- The active current I_d can be limited by regulating the saturation limits of δ_{IT} of the VSM/inertial control block

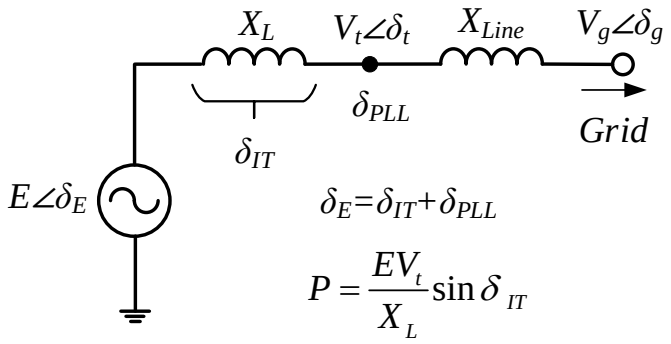

Voltage source behind impedance

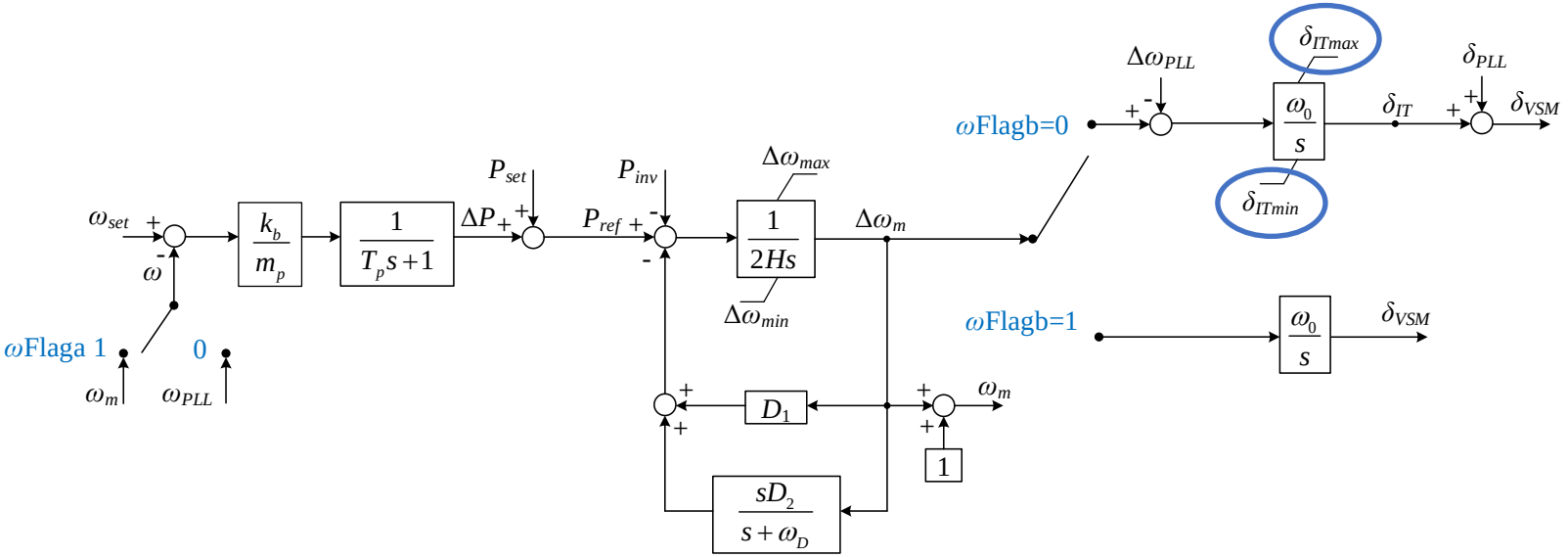

VSM/inertial control block

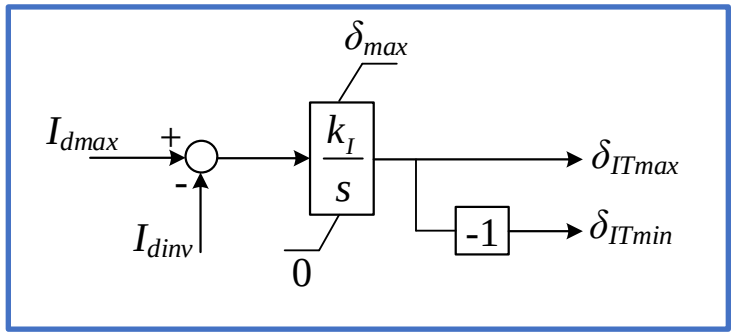

Active current I_d limiting

Steady State Current Limiting of VSM GFM

- The reactive current I_q can be limited by regulating the saturation limits E_{max} and E_{min} of the voltage control block
- The steady state current limiting control adopts a *P*-priority approach

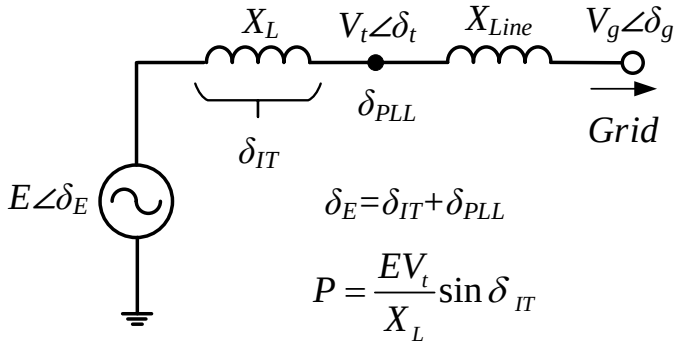

Voltage source behind impedance

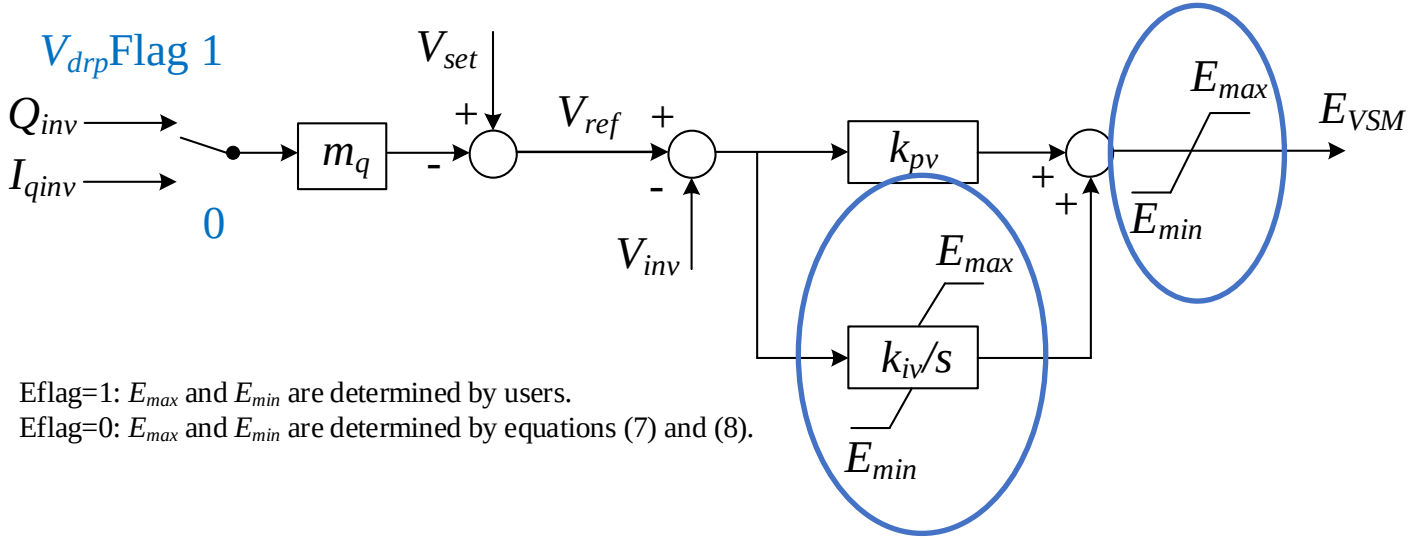

Voltage control block

$$I_{d\max} = k_{PF} I_{\max}$$

$$I_{q\max} = \sqrt{I_{\max}^2 - I_{dinv}^2}$$

P priority control

$$E_{\min} = \sqrt{(V_{inv} - I_{q\max} X_L)^2 + (I_{dinv} X_L)^2}$$

$$E_{\max} = \sqrt{(V_{inv} + I_{q\max} X_L)^2 + (I_{dinv} X_L)^2}$$

Reactive current limiting

Transient Current Limiting of VSM GFM

- A transient current limiting function is used to limit the output current algebraically at the beginning of a fault, which is the same as used by REGFM_A1

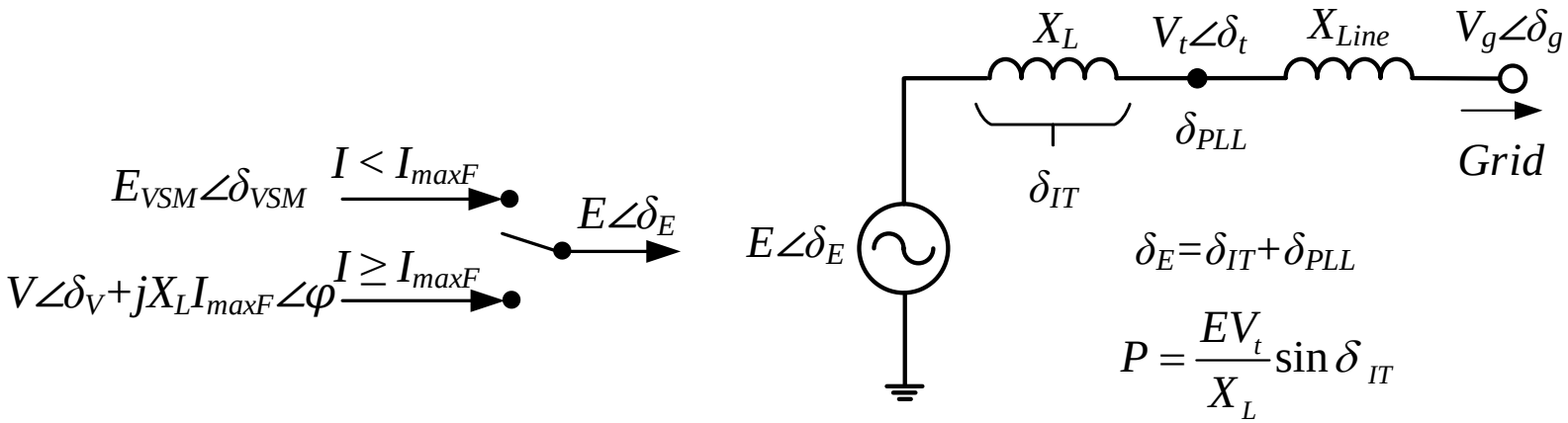

Testing in a Single-GFM Infinite-Bus System

- Both PSS/E and PSCAD models were developed based on the VSM GFM model specification
- All parameters were set the same in the PSS/E and PSCAD models
- The PSCAD model is an IGBT-based detailed model that includes additional PWM control, and the transient current limiting is implemented at the PWM control layer
- The transient current limiting in PSS/E is implemented algebraically
- 18 variables were compared

Islanding

- After disconnecting from the grid, the two GFMs can maintain the stable operation of the grid

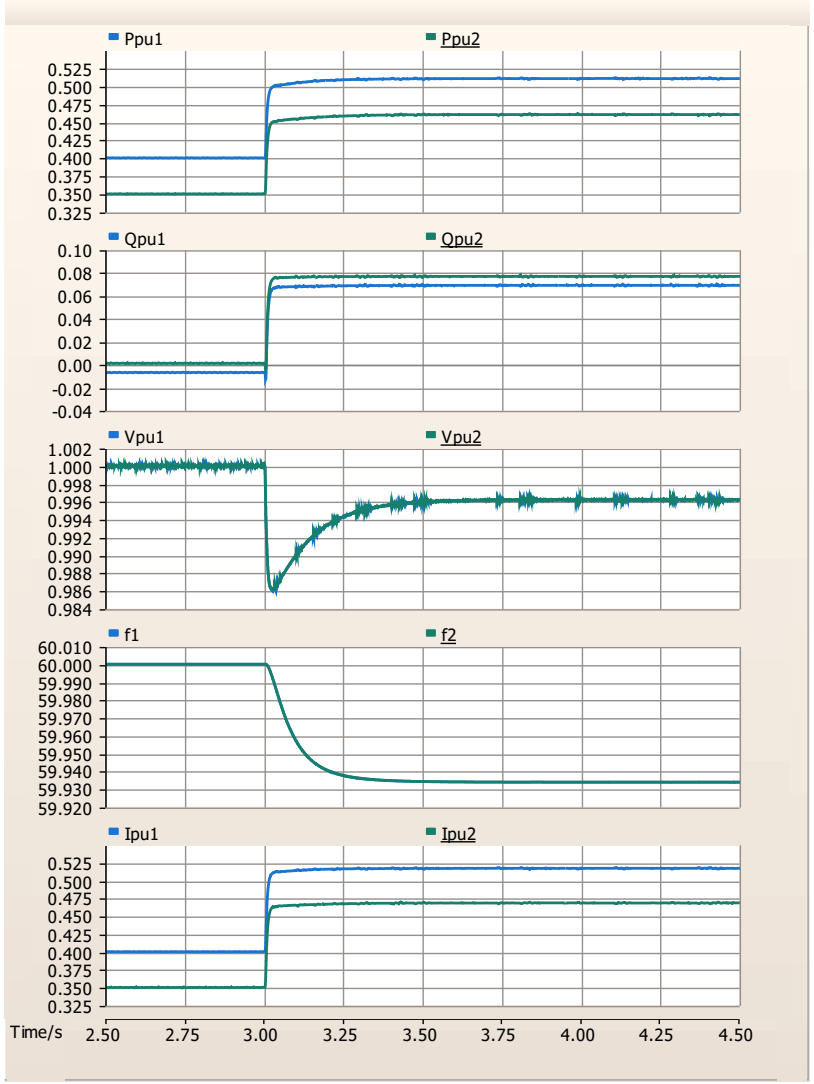

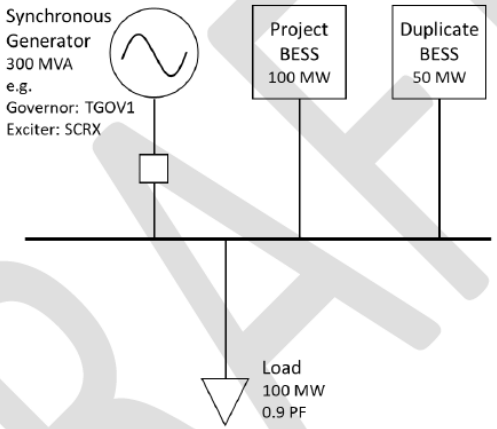

Source: NERC GFM report

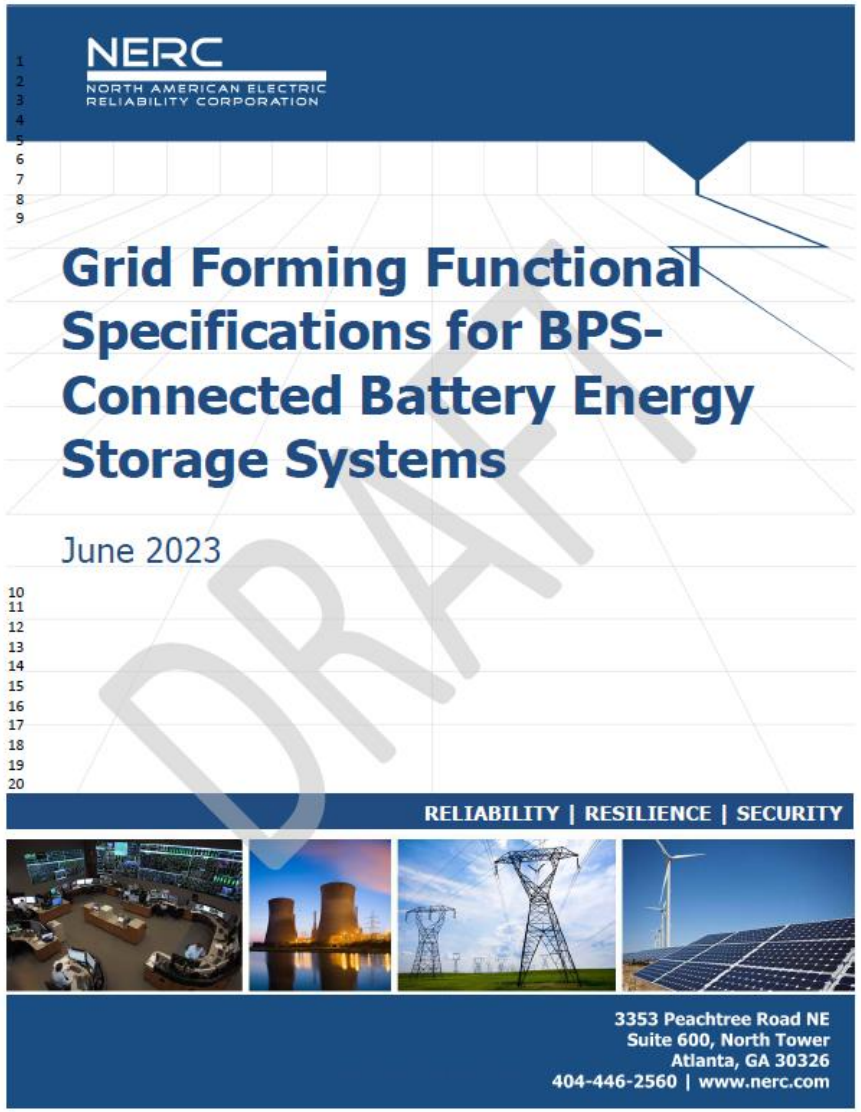

Islanding (PSS/E and PSCAD comparison)

- 18 variables were compared and achieved a good level of alignment

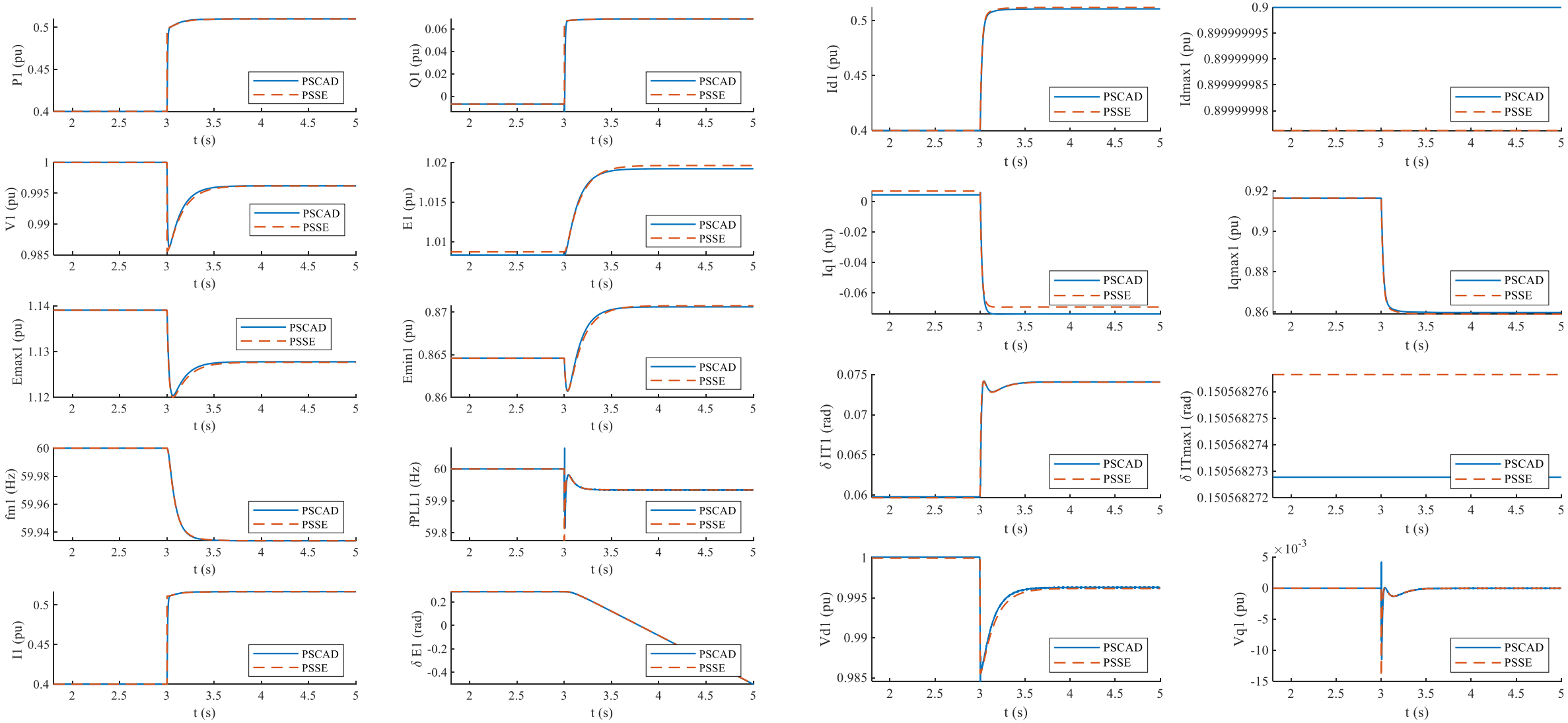

5% Voltage Drop

- When the grid voltage drops, the VSM GFM increases the reactive power Q
- The steady state Q follows the Q-V droop

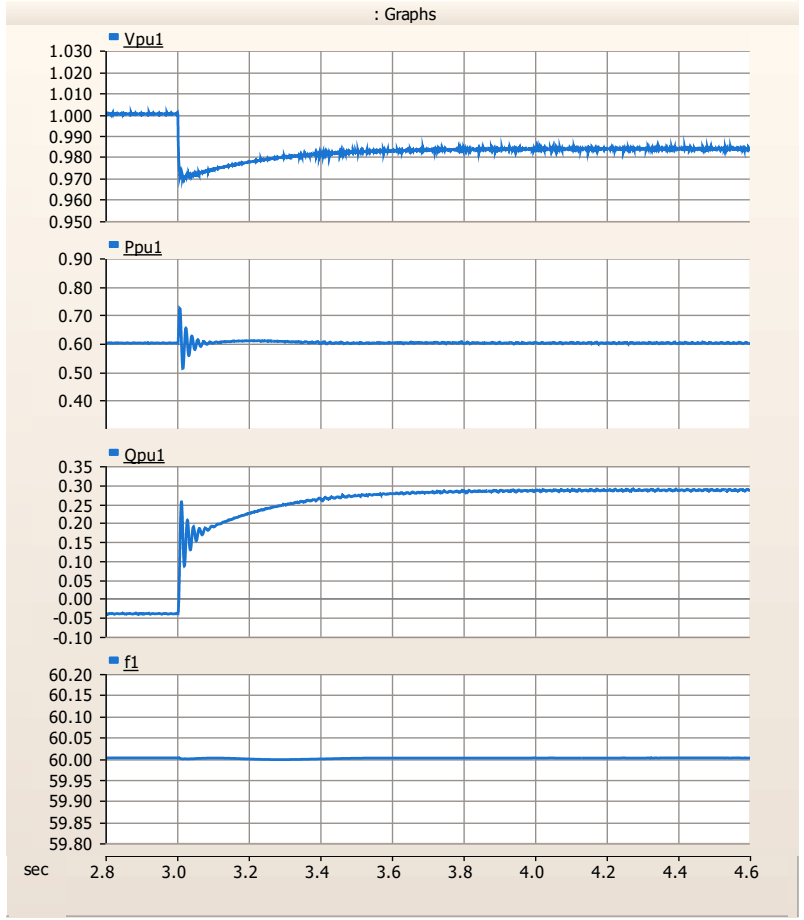

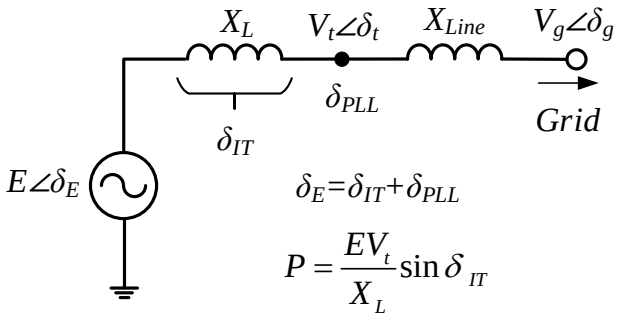

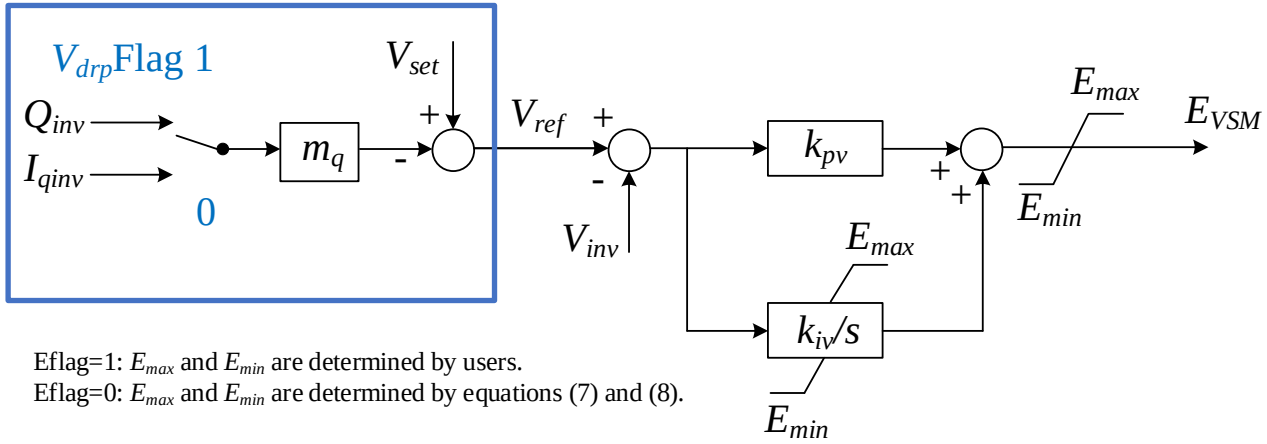

Eflag=1: E_{max} and E_{min} are determined by users.
Eflag=0: E_{max} and E_{min} are determined by equations (7) and (8).

5% Voltage Drop (PSS/E and PSCAD comparison)

- 18 variables were compared and achieved a good level of alignment

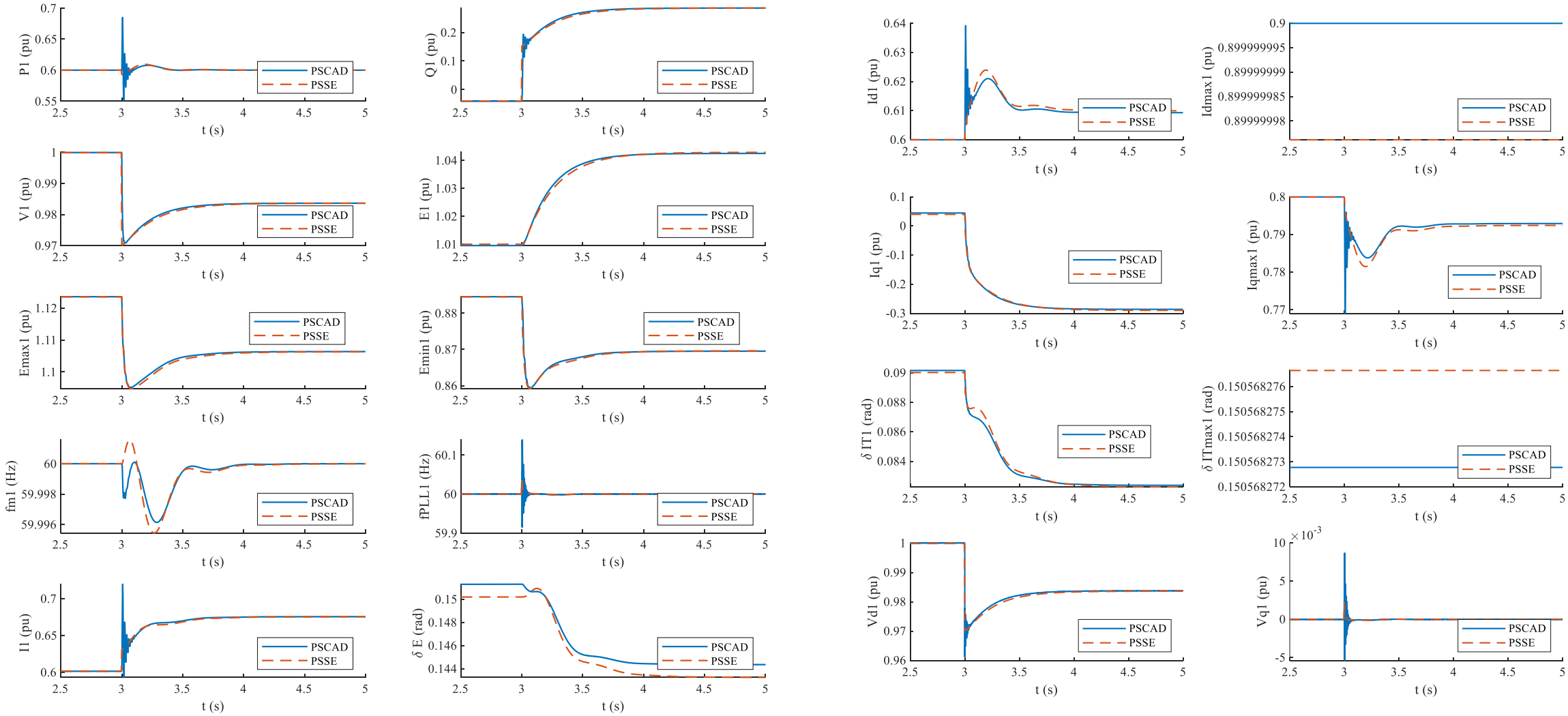

Frequency Drop (59.5 Hz)

- The VSM GFM responds to the frequency change by increasing *P* autonomously
- The frequency drop results in the overload of VSM GFM
- I_d was limited by limiting the angle δ_{IT}

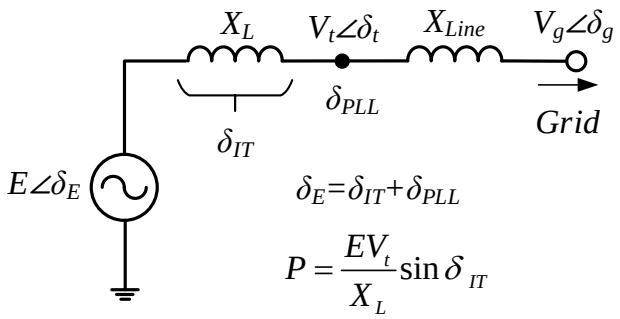

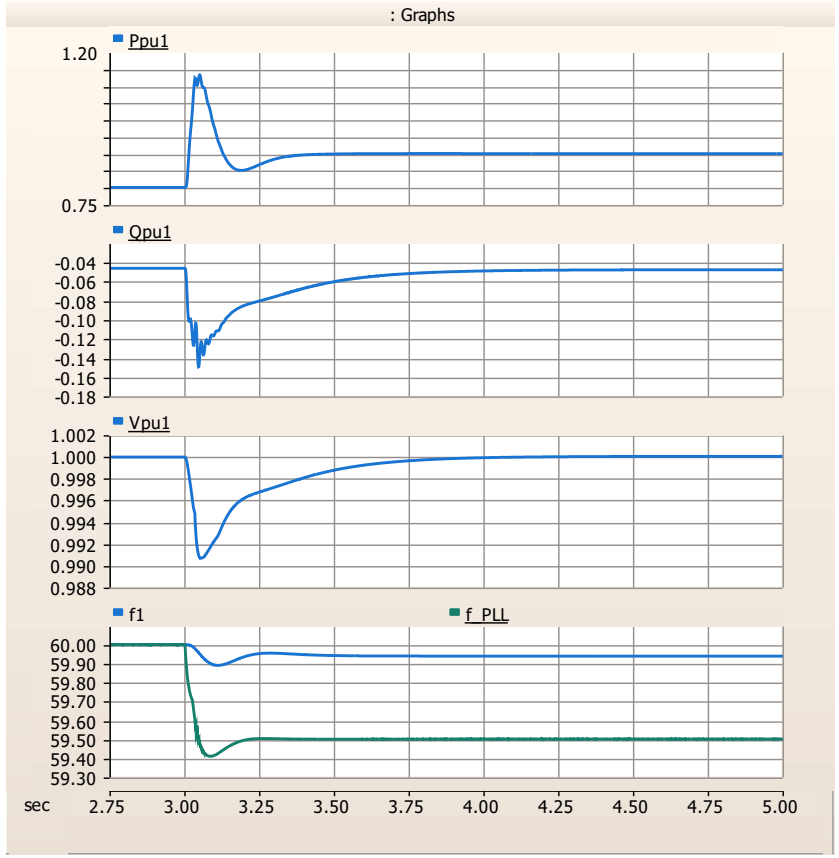

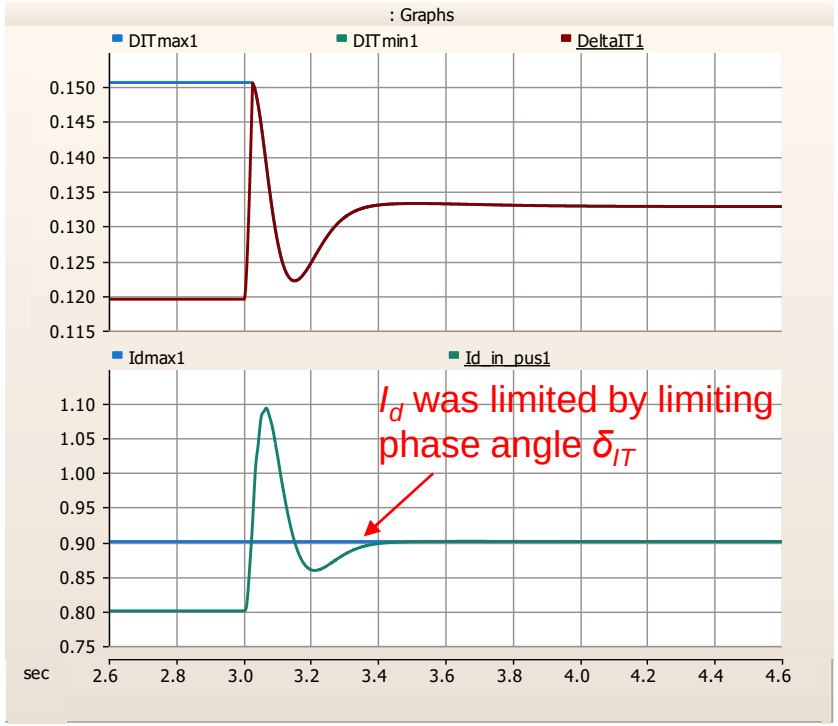

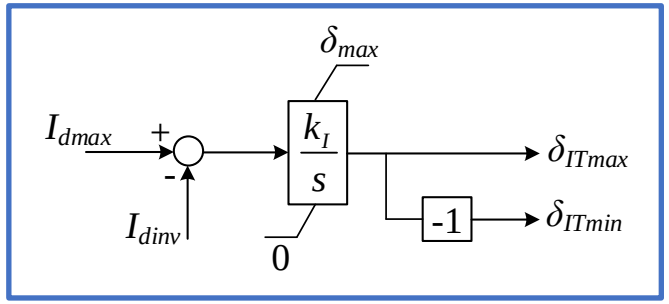

Active current I_d limiting

Frequency Drop (PSS/E and PSCAD comparison)

- 18 variables were compared and achieved a good level of alignment

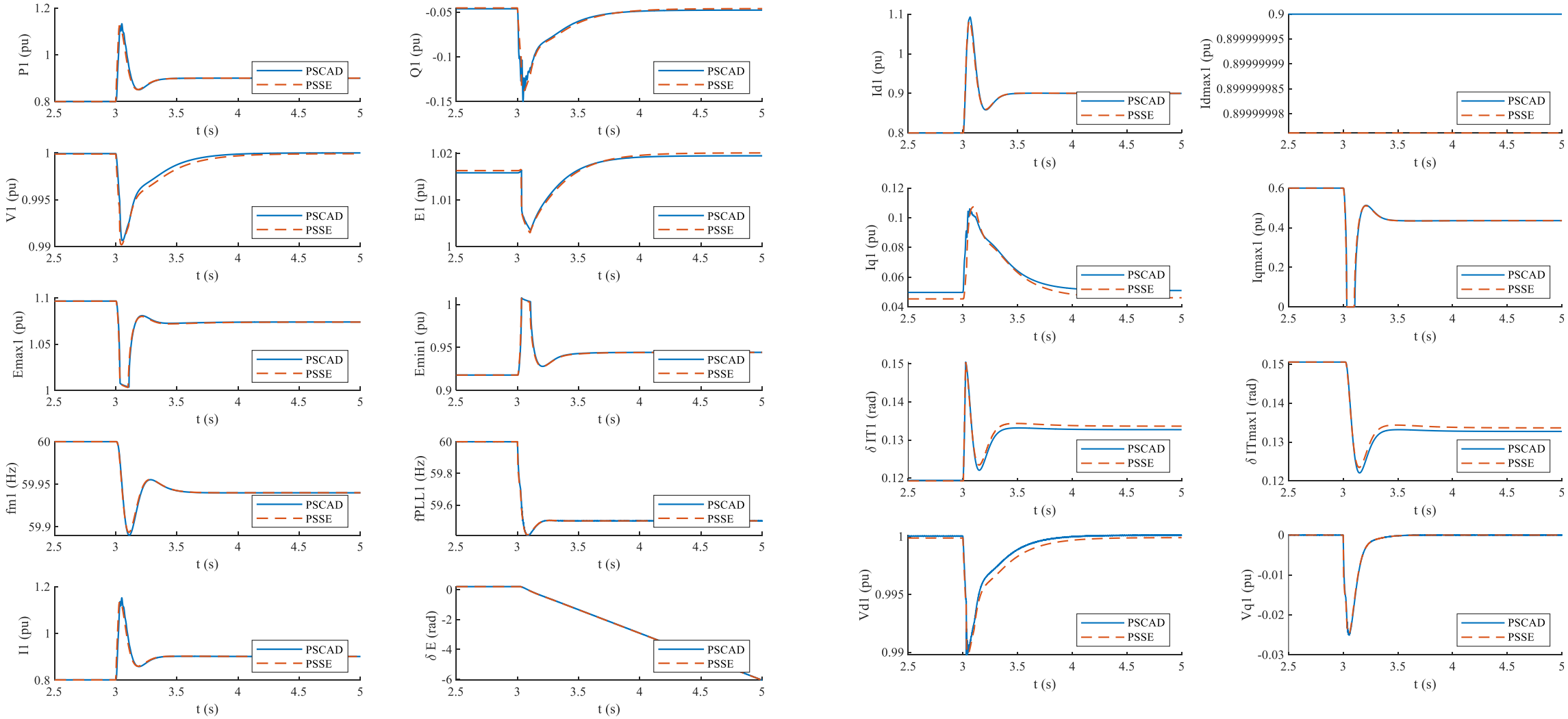

0.1 s fault

- The transient current limiting clips the current at I_{maxF} 1.5 pu
- The reactive current limiting (E_{max} and E_{min}) later limits the current at 1 pu
- The active current limiting also plays a role in limiting the steady-state current

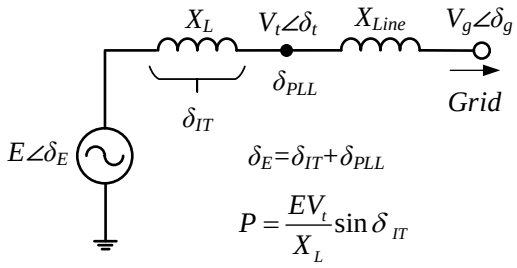

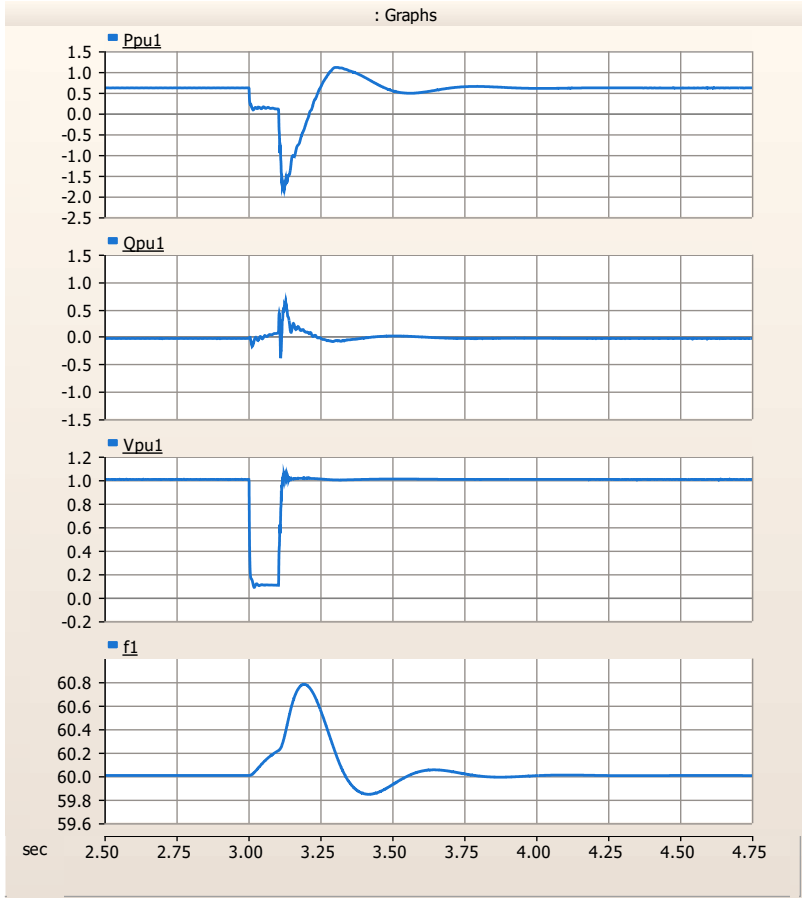

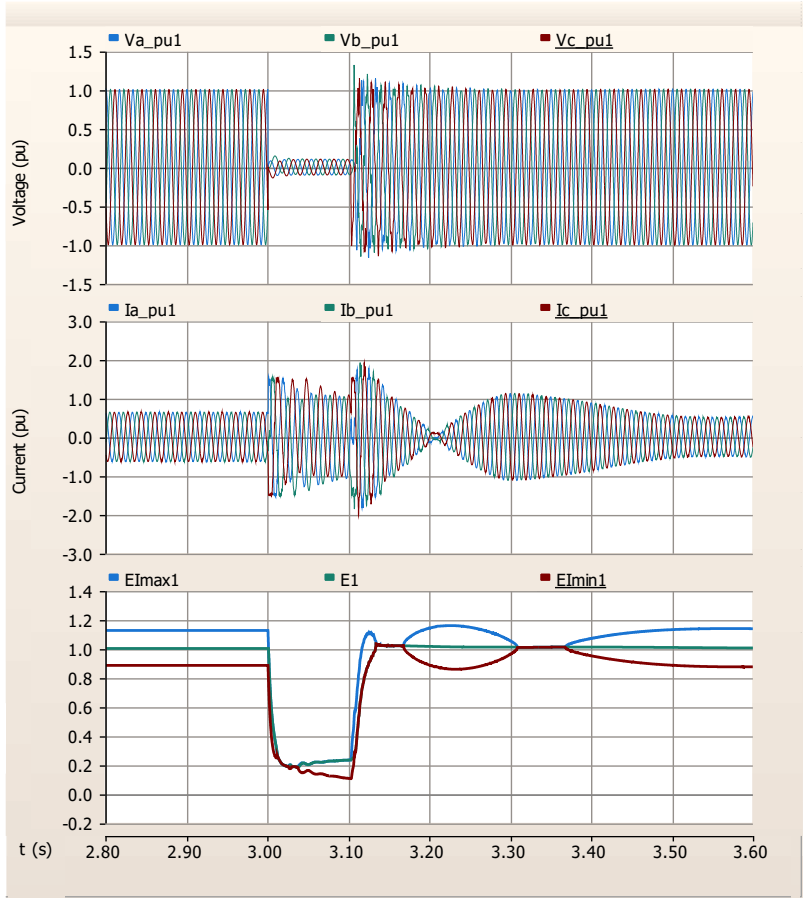

$$E_{\min} = \sqrt{(V_{inv} - I_{q\max} X_L)^2 + (I_{dinv} X_L)^2}$$

$$E_{\max} = \sqrt{(V_{inv} + I_{q\max} X_L)^2 + (I_{dinv} X_L)^2}$$

Reactive current limiting

0.1 s fault (PSS/E and PSCAD comparison)

- 18 variables were compared and achieved a good level of alignment

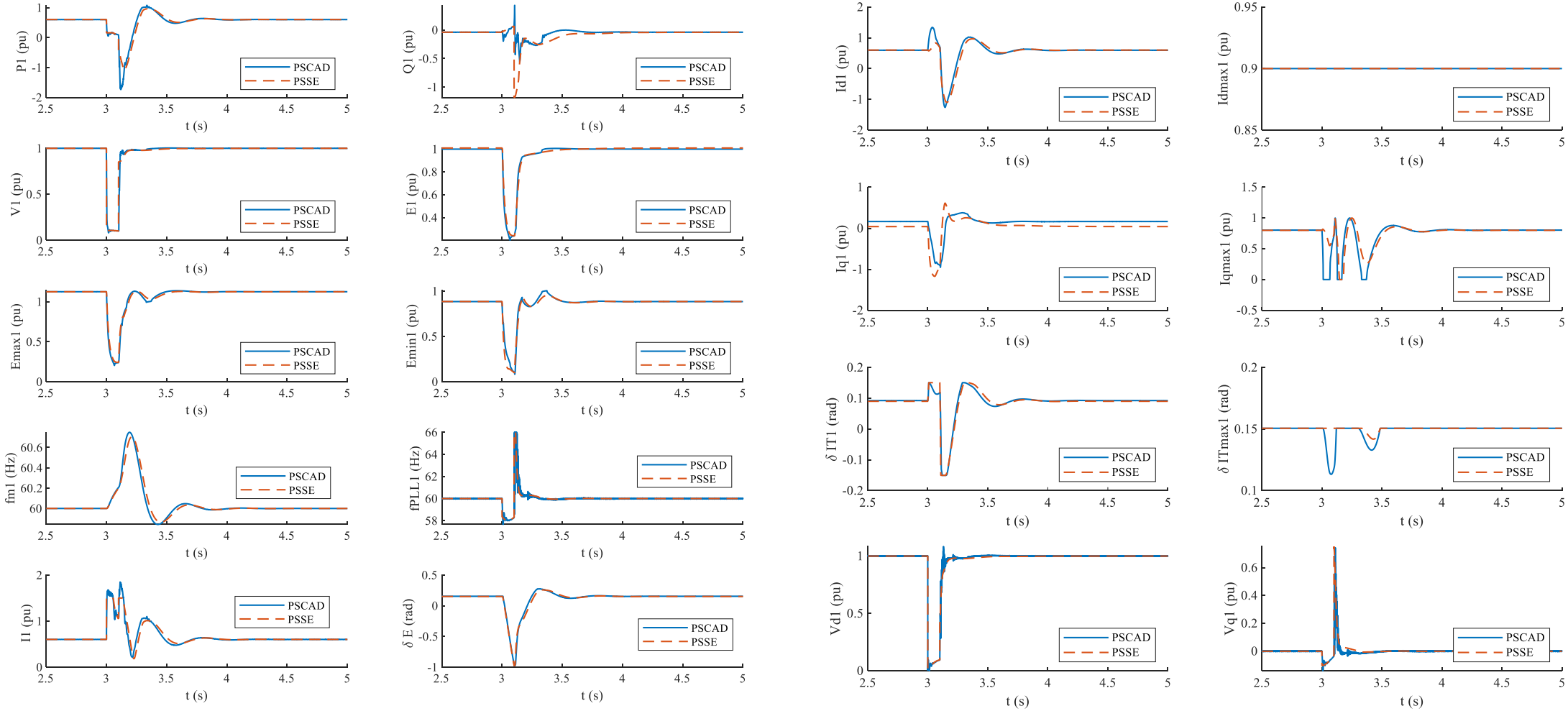

1 s fault

- The transient current limiting clips the current at I_{maxF} = 1.5 pu
- The steady-state current limiting later limits the current at I_{max} = 1 pu by reducing E and clamping phase angle
- Initial overcurrent post fault because of reduced E

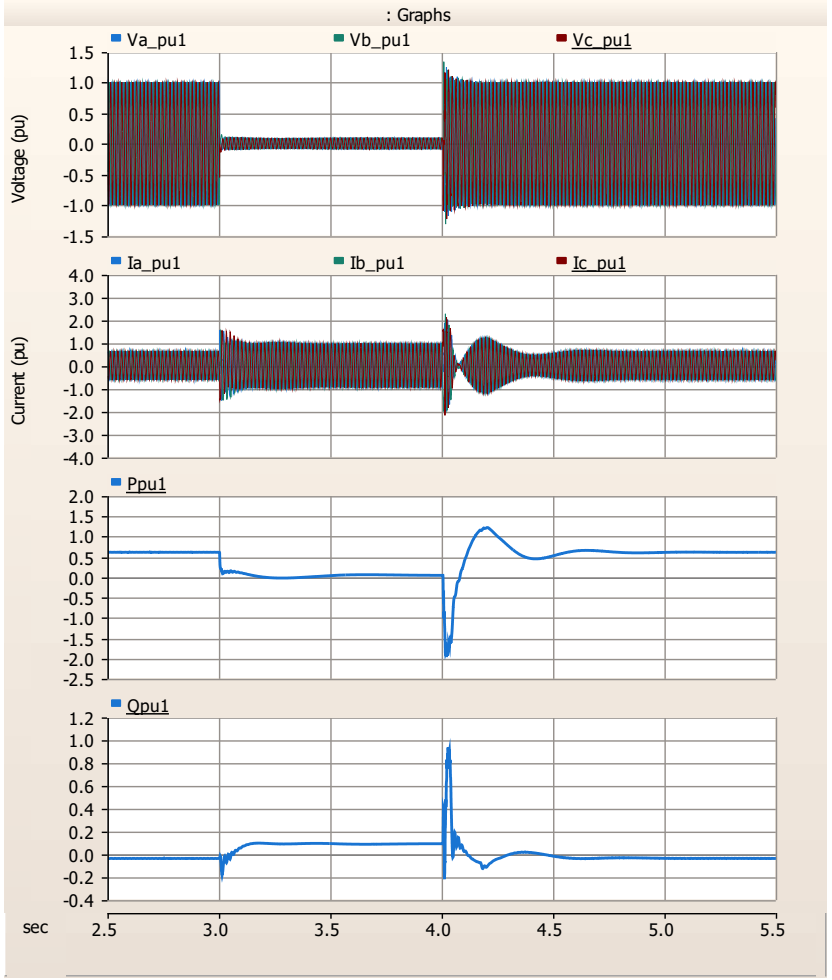

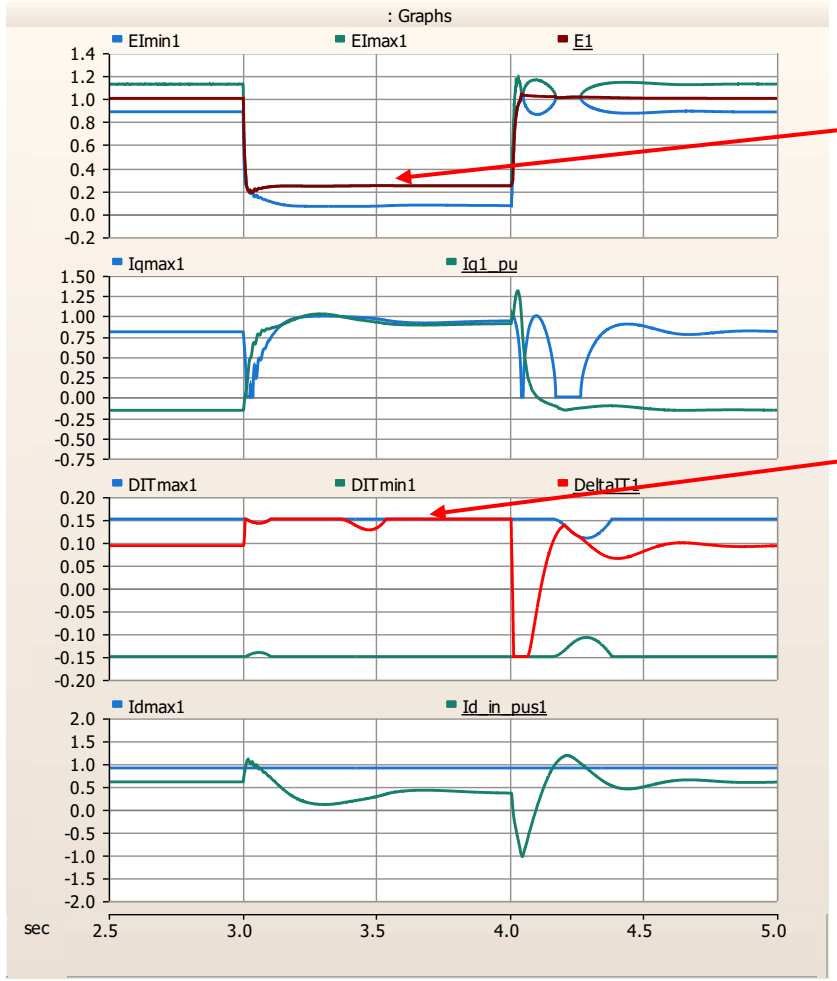

I_q is limited by E_{max}/E_{min} controller

$$E_{\min} = \sqrt{(V_{inv} - I_{q\max} X_L)^2 + (I_{dinv} X_L)^2}$$

$$E_{\max} = \sqrt{(V_{inv} + I_{q\max} X_L)^2 + (I_{dinv} X_L)^2}$$

I_d is limited by the saturation limit δ_{ITmax} and δ_{ITmin}

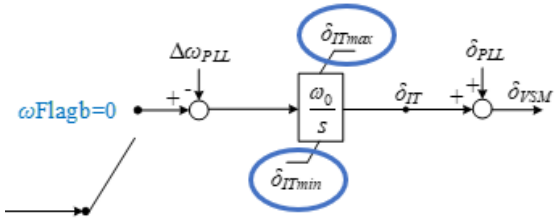

1 s fault (PSS/E and PSCAD comparison)

- 18 variables were compared and achieved a good level of alignment

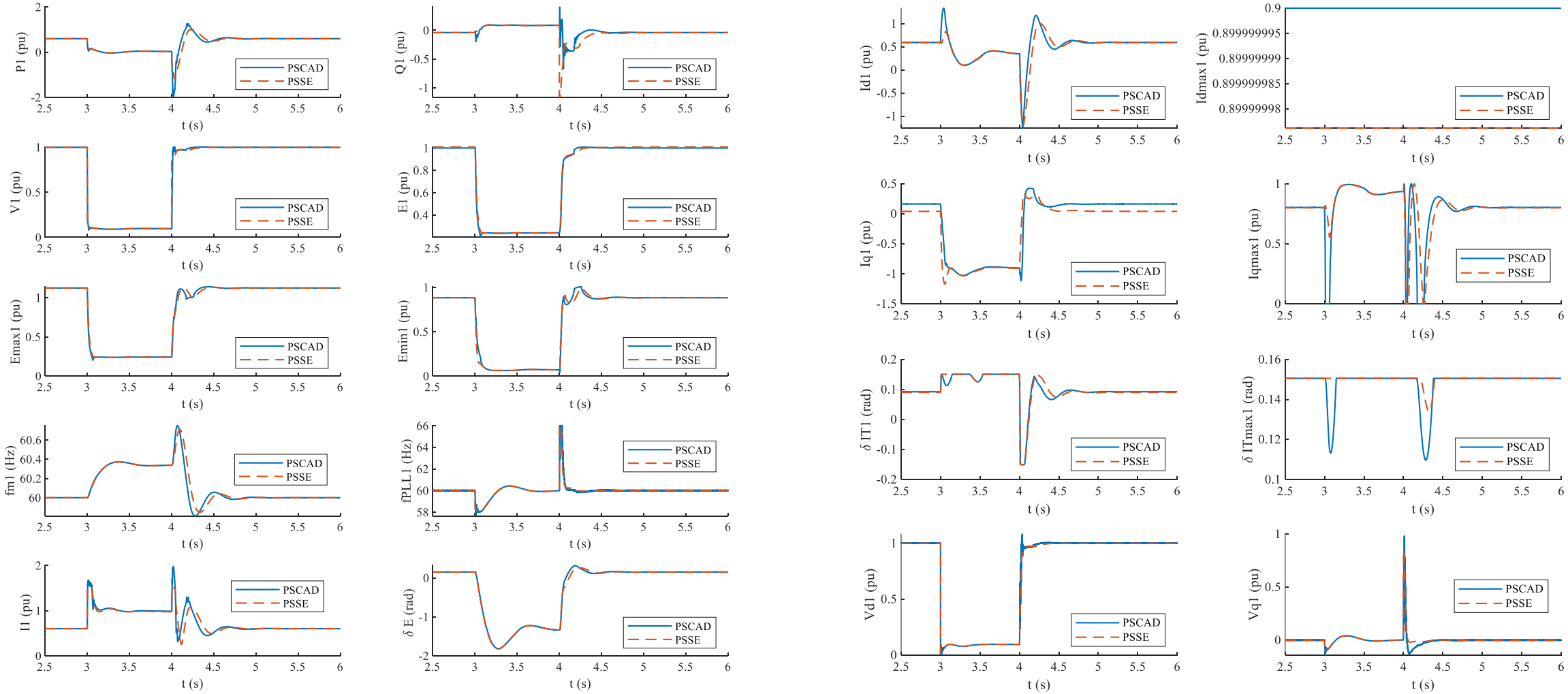

ERCOT LVRT Test [1]

- 18 variables were compared and achieved a good level of alignment

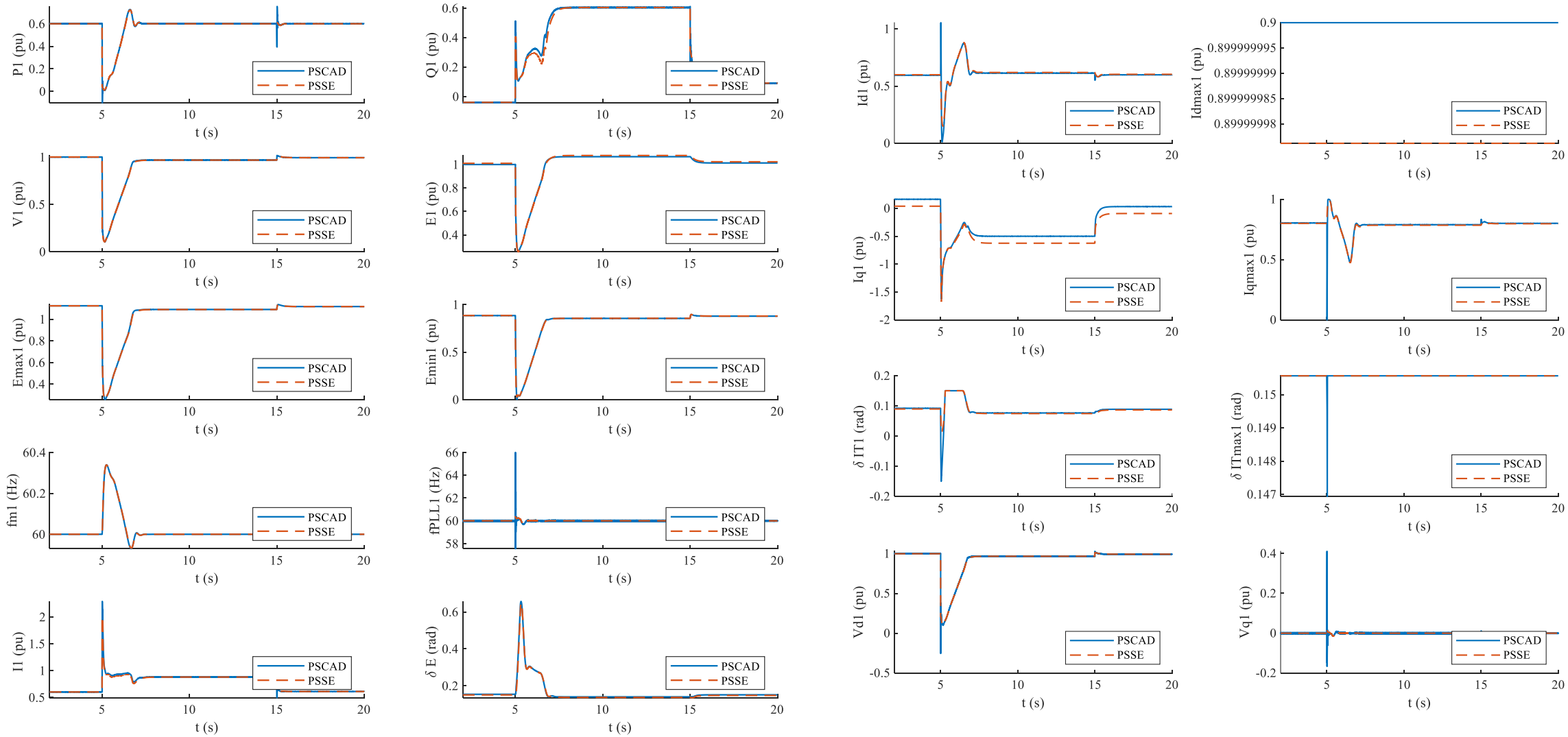

[1] Yunzhi Cheng, https://sites.google.com/view/dmview/home

Conclusions

- A VSM GFM model specification has been developed through the collaboration between PNNL, EPRI, and GE
- The VSM GFM model includes the VSM/inertial control block, Q-V droop control block, transient current limiting function, and steady state active and reactive current limiting control blocks
- User-defined PSS/E and PSCAD models were developed and tested under various disturbances in a single-GFM infinite-bus system, and the PSS/E and PSCAD results match well

This material is based upon work supported by the U.S. Department of Energy's Office of Energy Efficiency and Renewable Energy (EERE) under Solar Energy Technologies Office (SETO) Award Number 38637. The views expressed herein do not necessarily represent the views of the U.S. Department of Energy or the United States Government.

SOLAR ENERGY
TECHNOLOGIES OFFICE
U.S. Department Of Energy

unifi
consortium
universal interoperability
for grid-forming inverters

THANK YOU

50% Voltage Drop

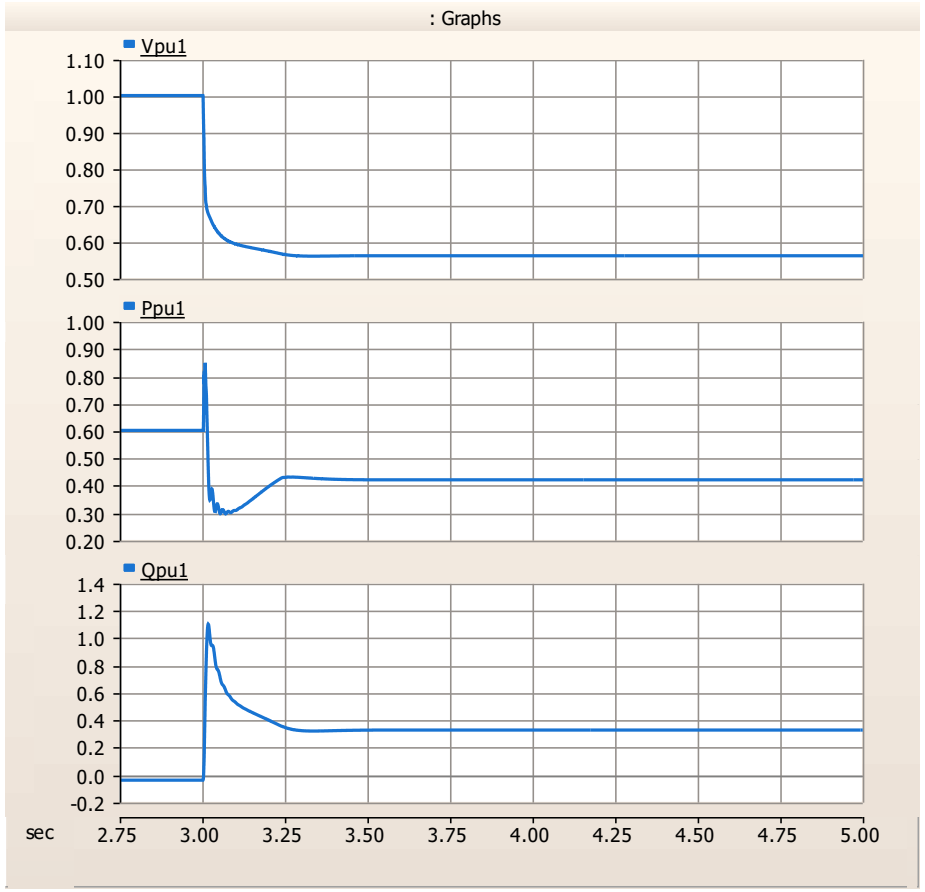

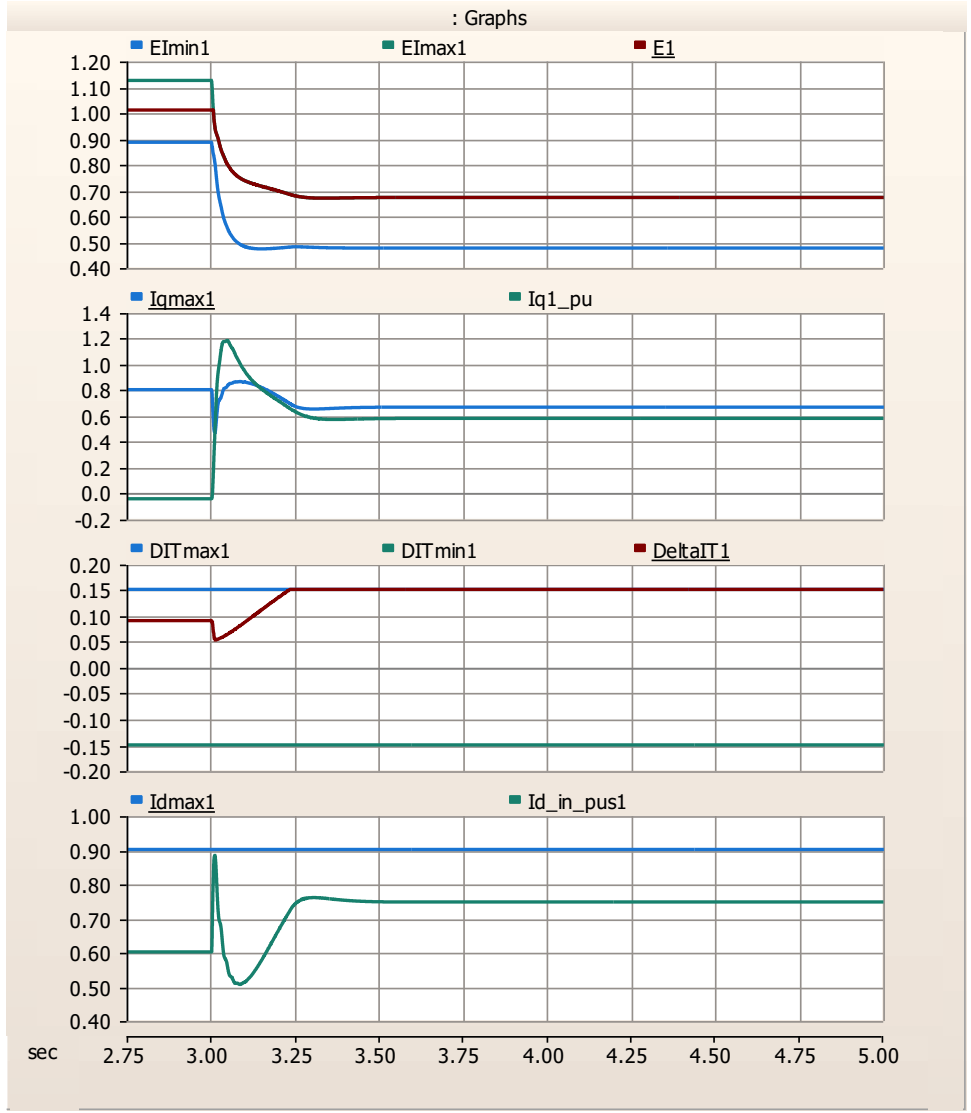

50% Voltage Drop